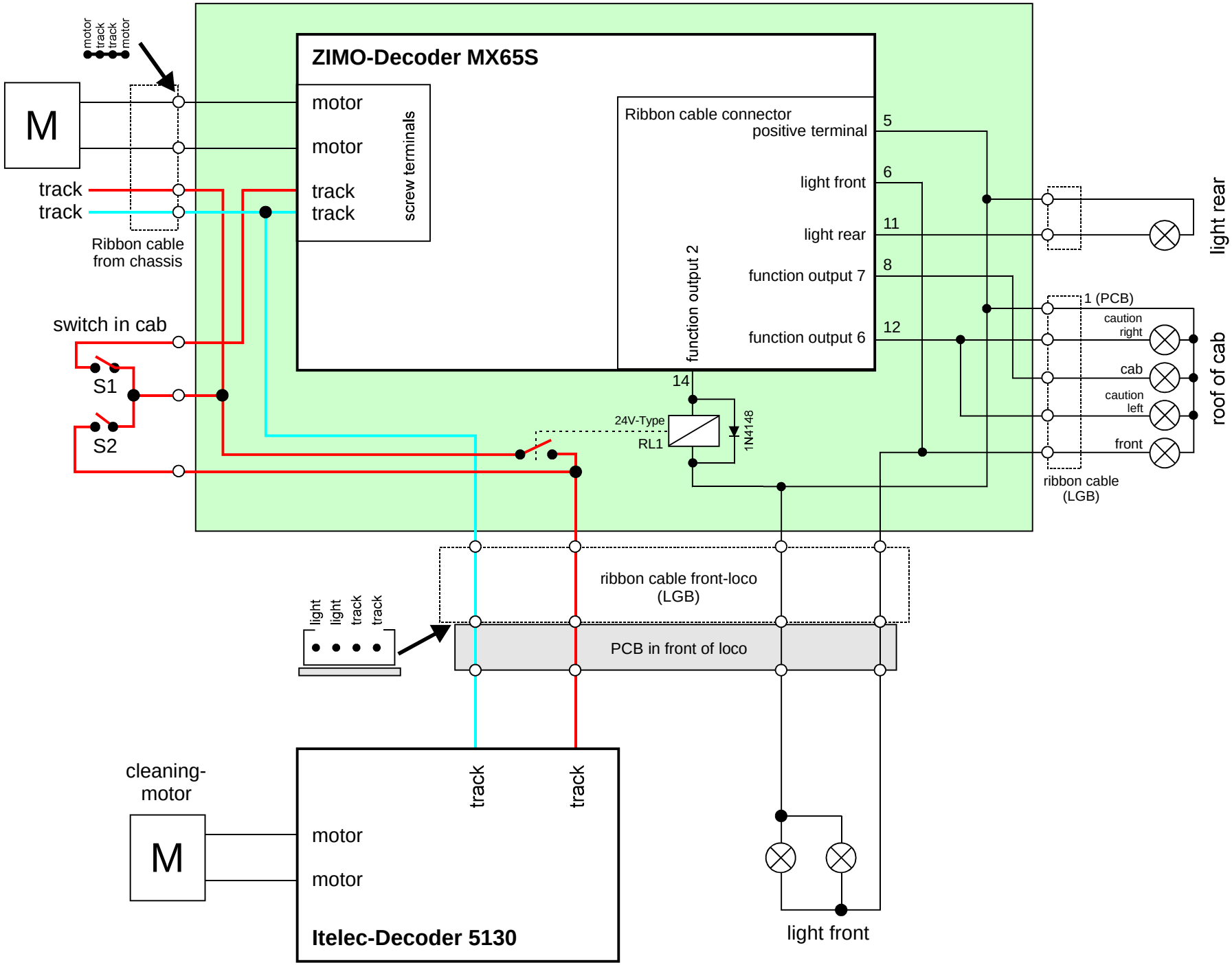
motor
track
track
motor
M
track
track
Ribbon cable
from chassis
switch in cab
S1
S2
ZIMO-Decoder MX65S
motor
motor
track
track
screw terminals
Ribbon cable connector
positive terminal
light front
light rear
function output 7
function output 6
function output 2
5
6
11
8
12
14
24V-Type
RL1
1N4148
light rear
1 (PCB)
caution
right
cab
caution
left
front
roof of cab
ribbon cable
(LGB)
ribbon cable front-loco
(LGB)
light
light
track
track
PCB in front of loco
cleaning-
motor
M
track
track
motor
motor
Itelec-Decoder 5130
light front