LGB 20471 HG 3/3 Brünig

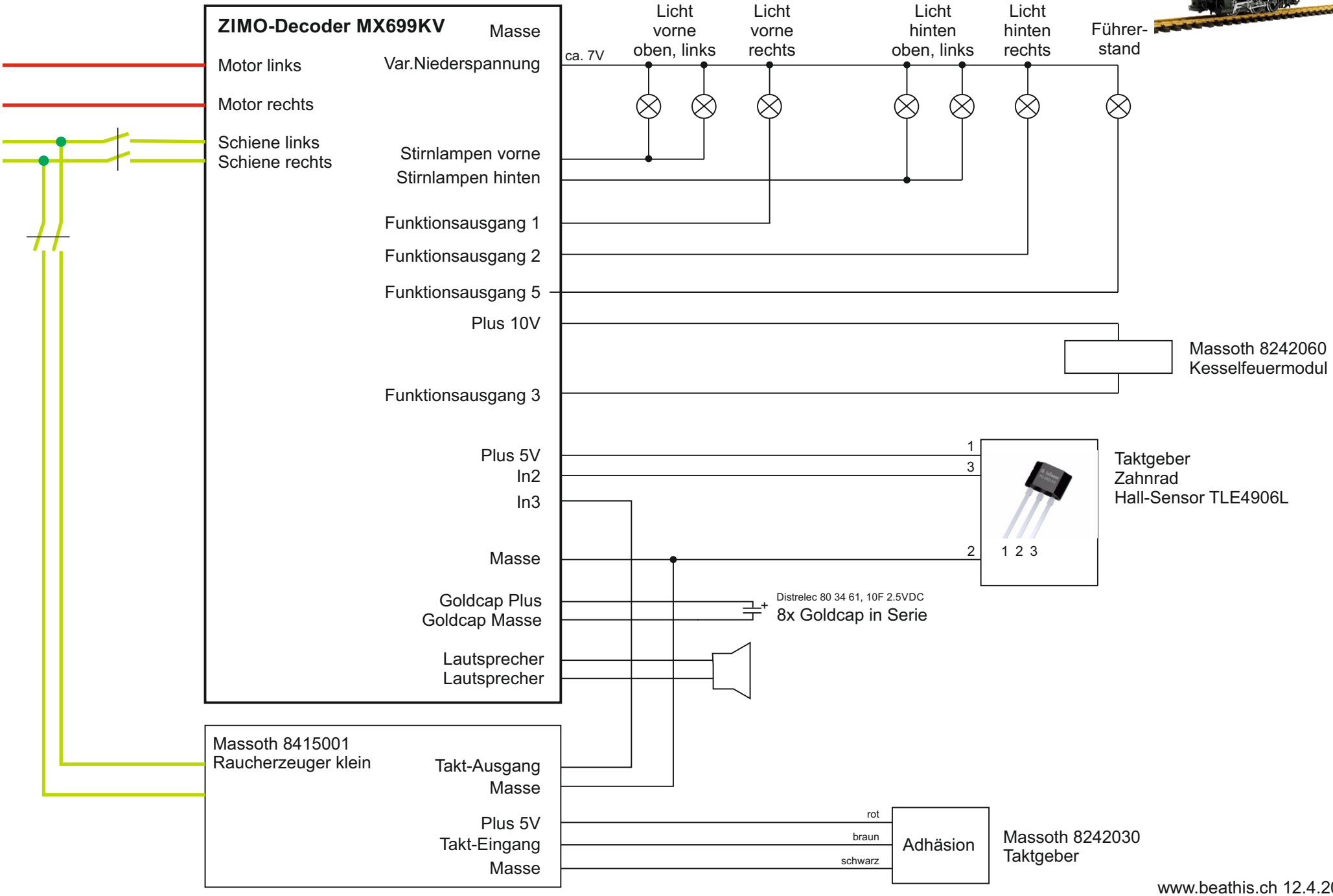

www.beathis.ch 12.4.2020