LGB Ge 4/4 II

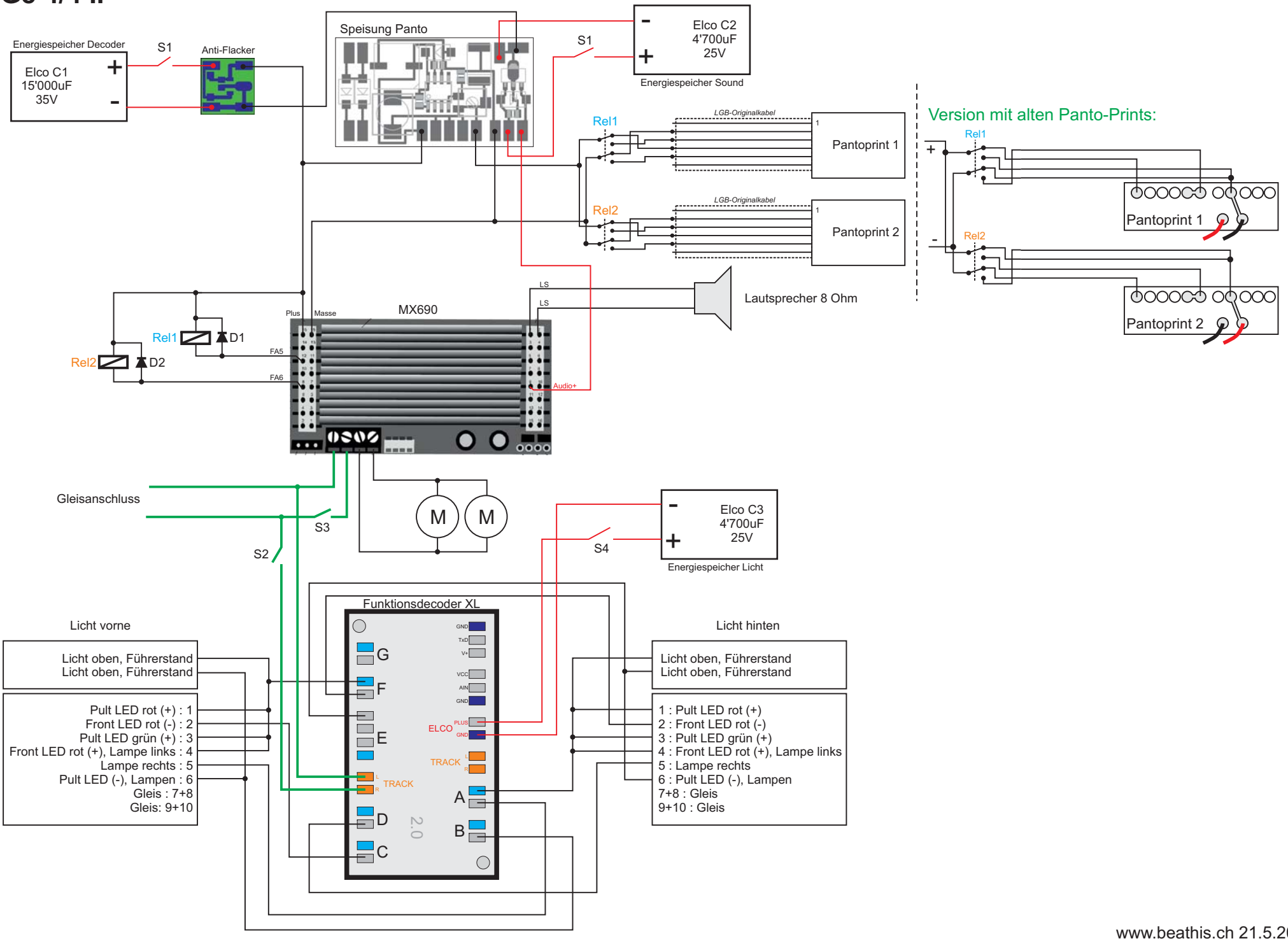

www.beathis.ch 21.5.2010